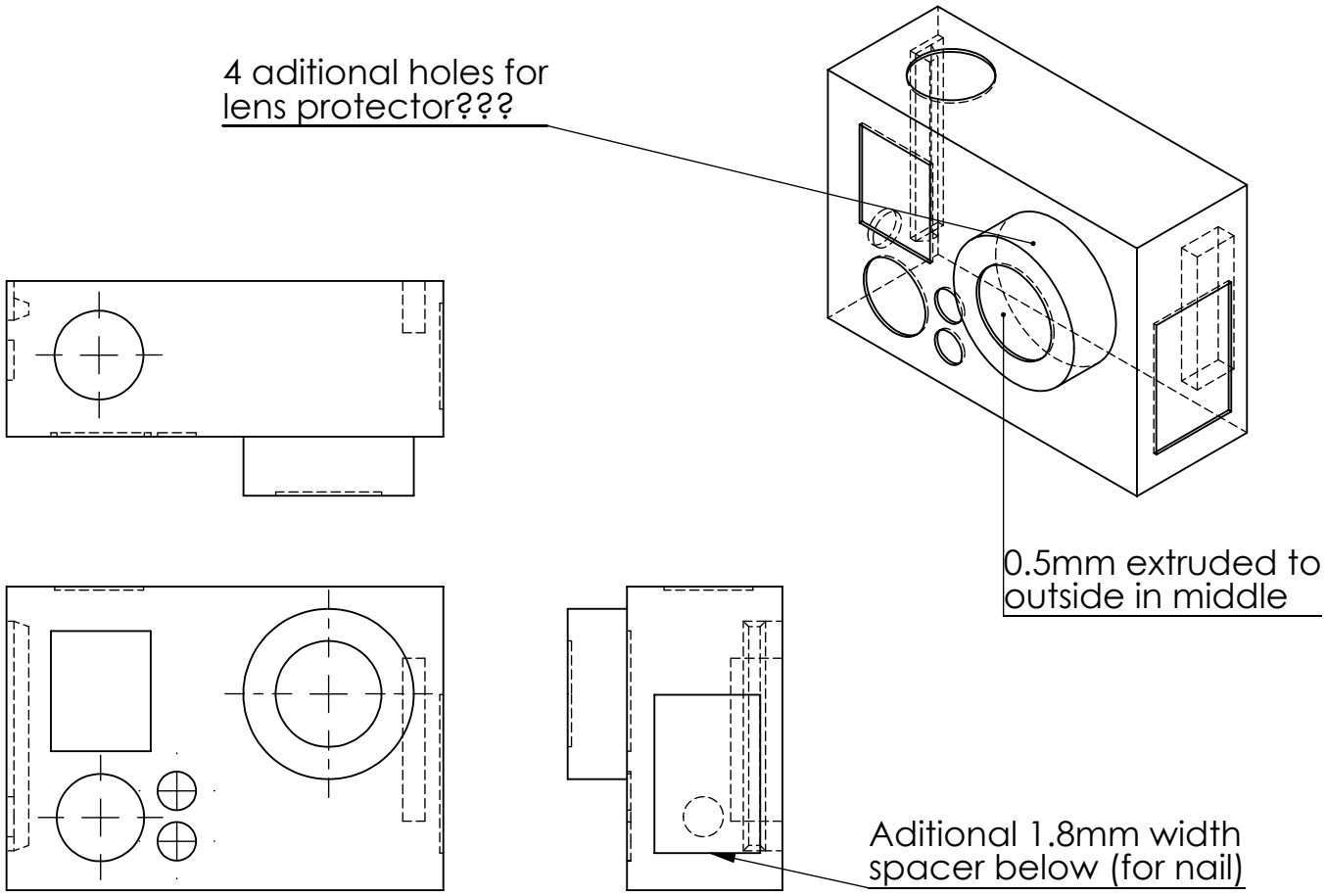
4 aditional holes for
lens protector???
0.5mm extruded to
outside in middle
Aditional 1.8mm width
spacer below (for nail)